SOMFY DEXXO PRO IO

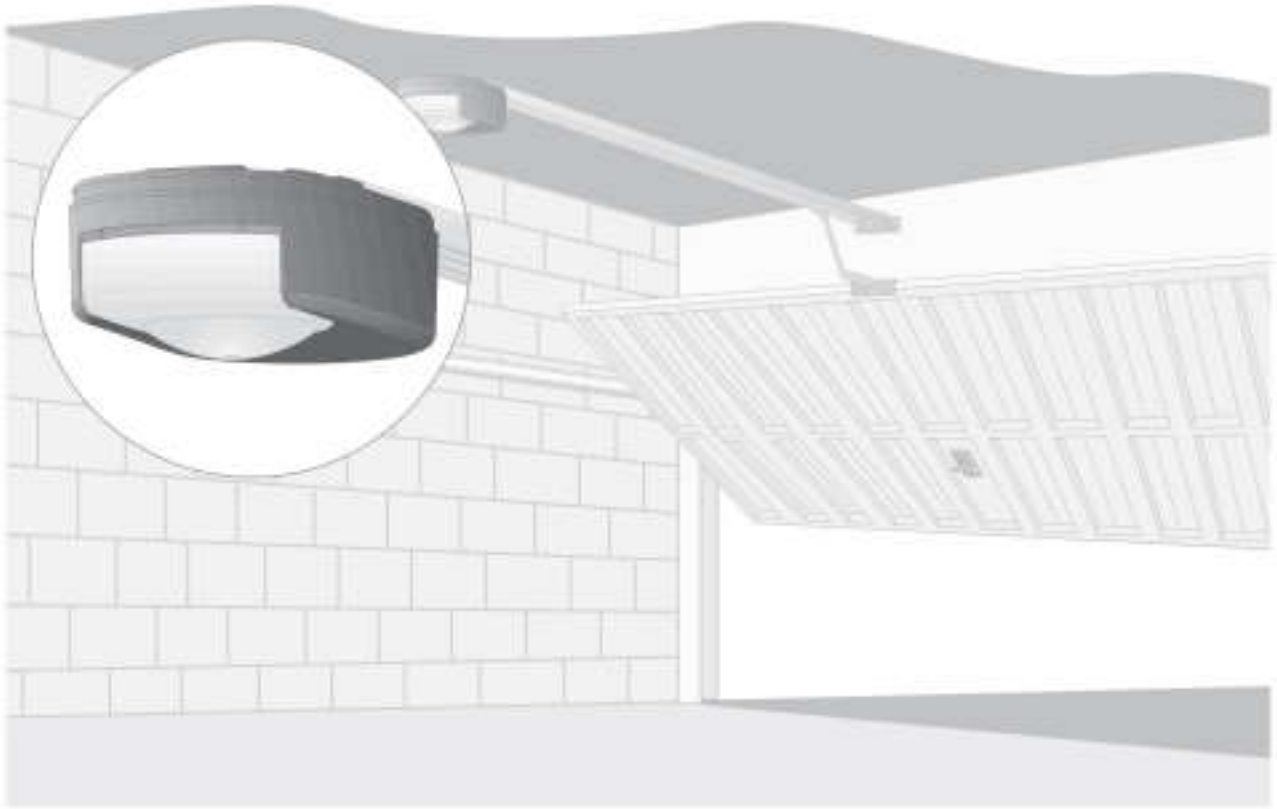

BOOK NOTICES DE POSE SIMPLIFIÉES

1

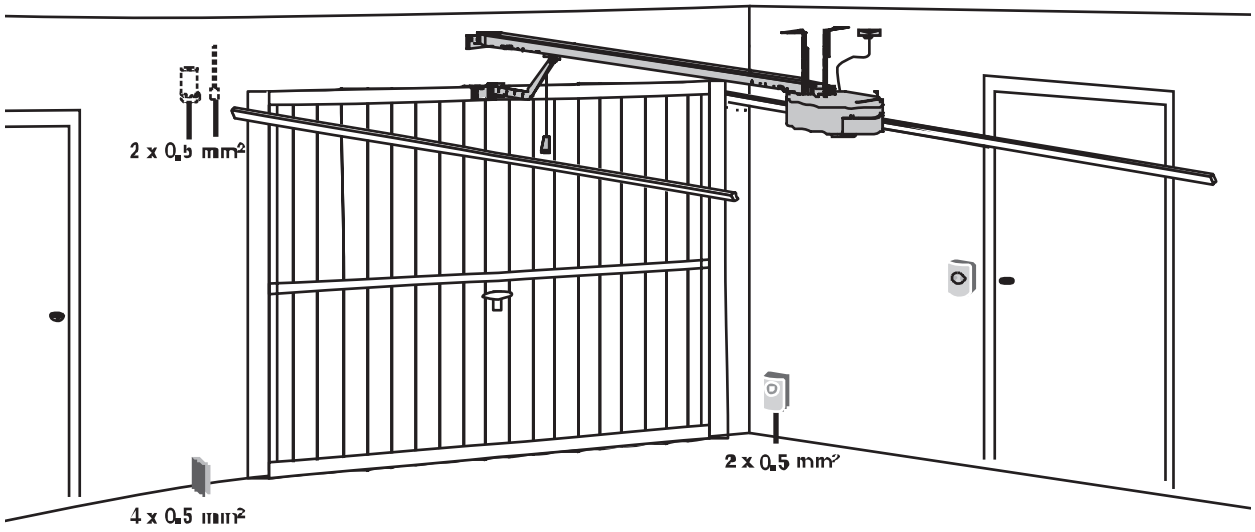
2 x 0,5 mm²
2 x 0,5 mm²
4 x 0,5 mm²

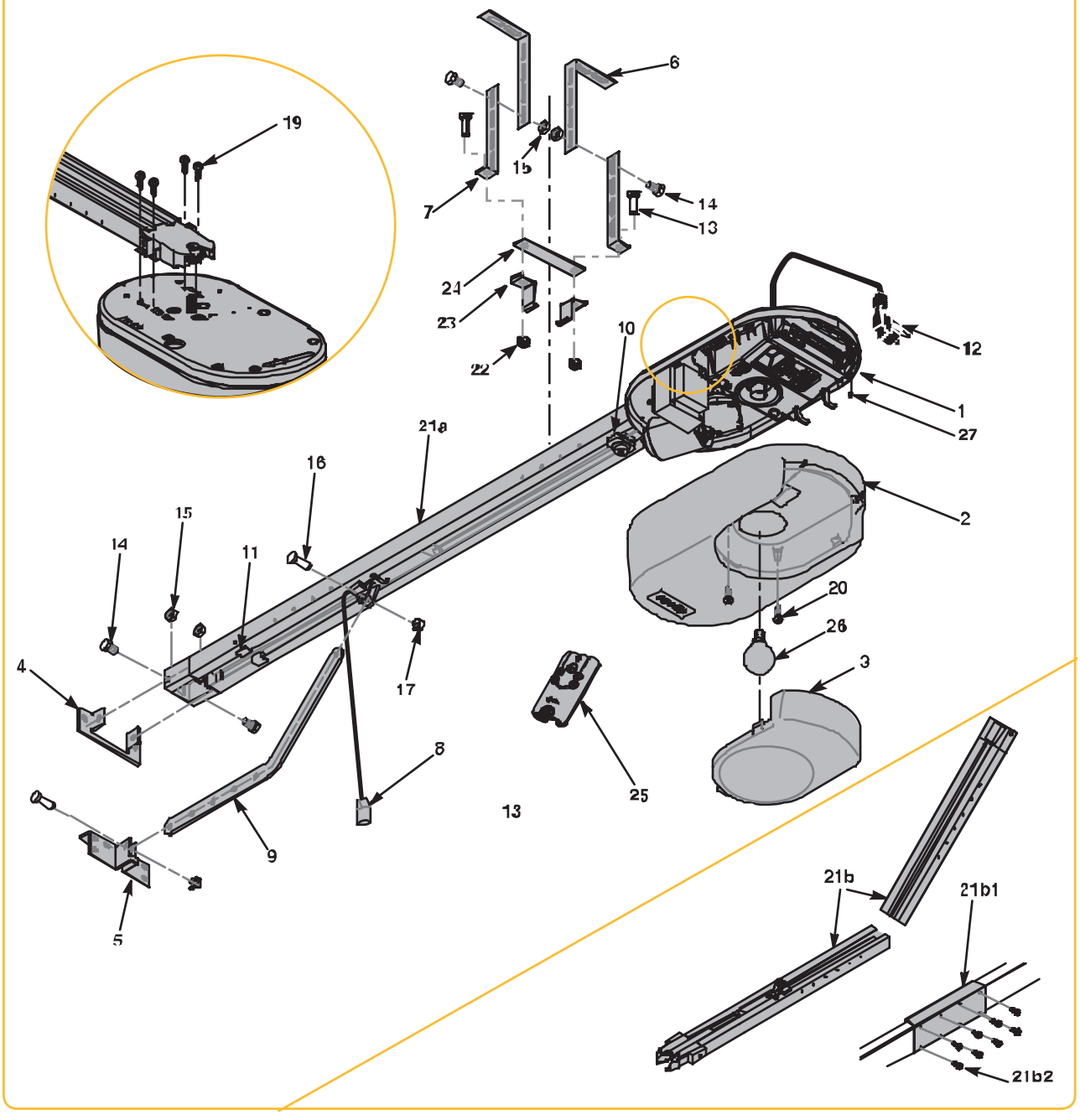
19
6
15
7
14
13
24
23
22
10
12
1
27
21a
16
15
14
11
2
20
26
3
4
17
8
25
13
9
5
21b
21b1
21b2

2

A

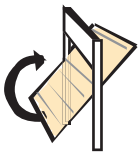

B

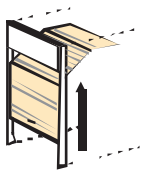

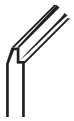

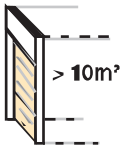

REF : 9009390

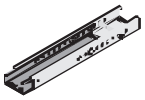

REF 2400673

C

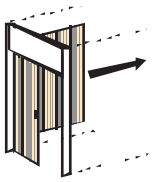

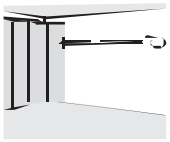

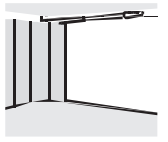

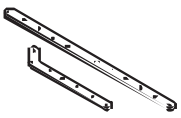

REF : 9014481

+

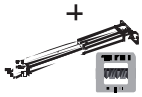

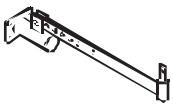

REF : 9014482

D

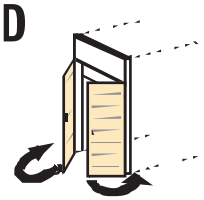

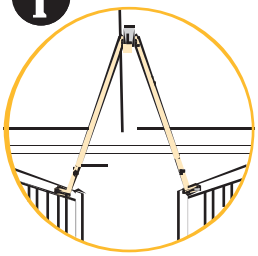

REF 2400459

E

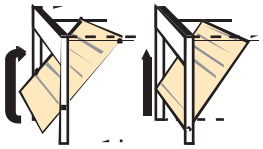

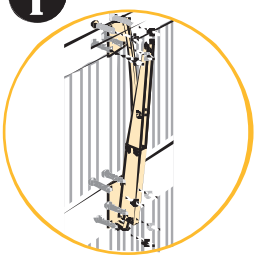

REF : 2400458

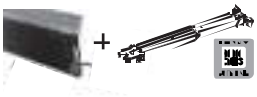

3

Dexxo Pro 800

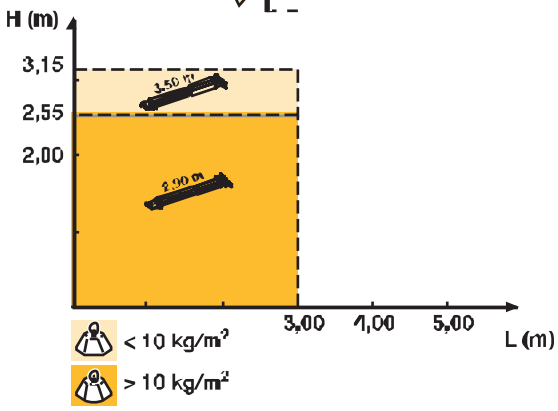

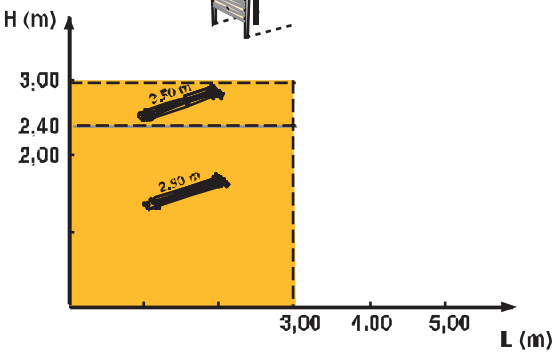

Dexxo Pro 1000

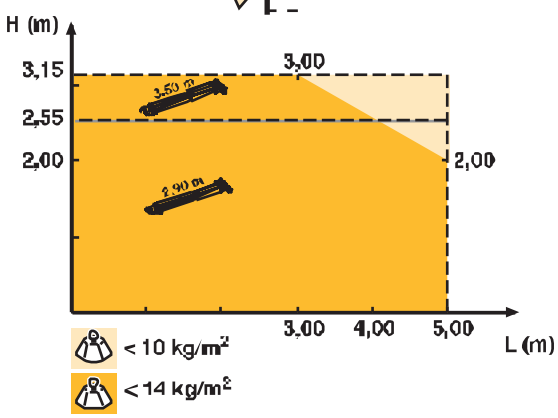

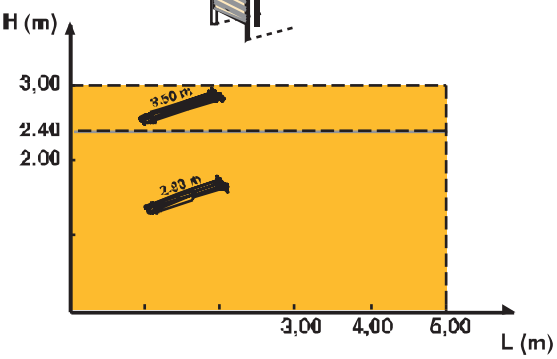

4

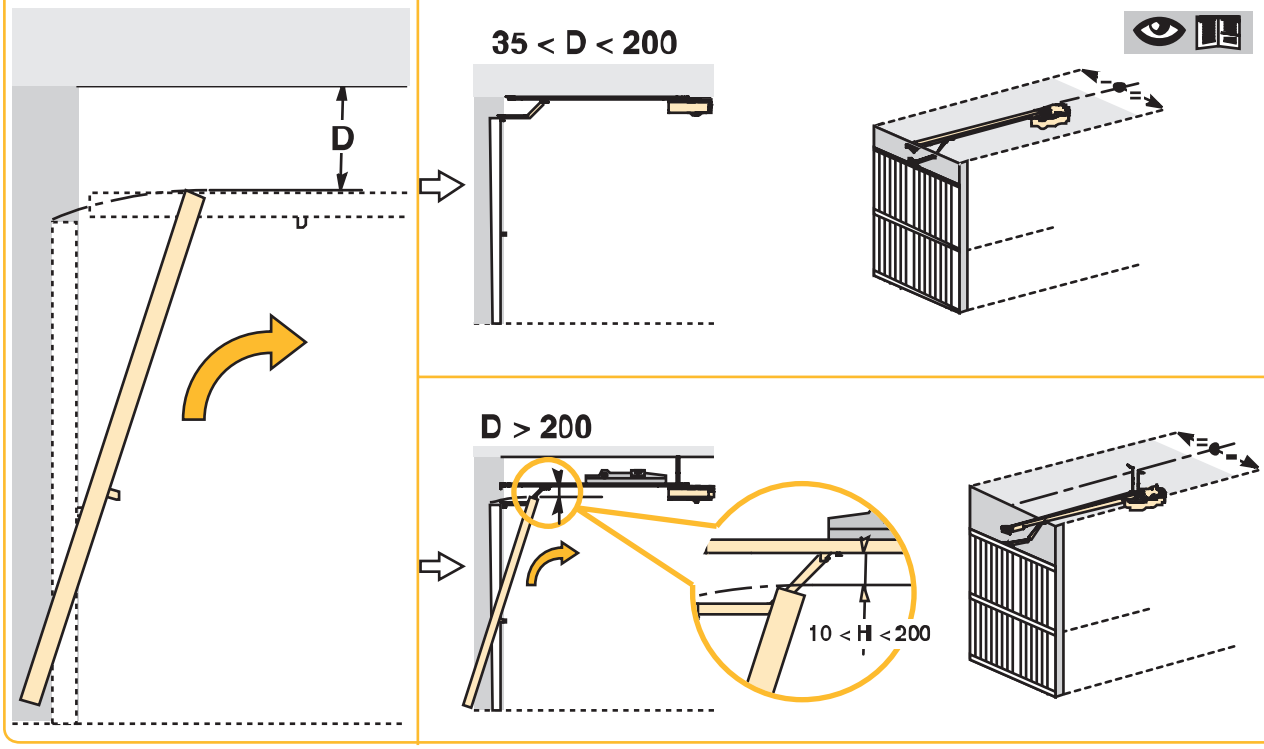
D
35 < D < 200
D > 200
10 < H < 200

5

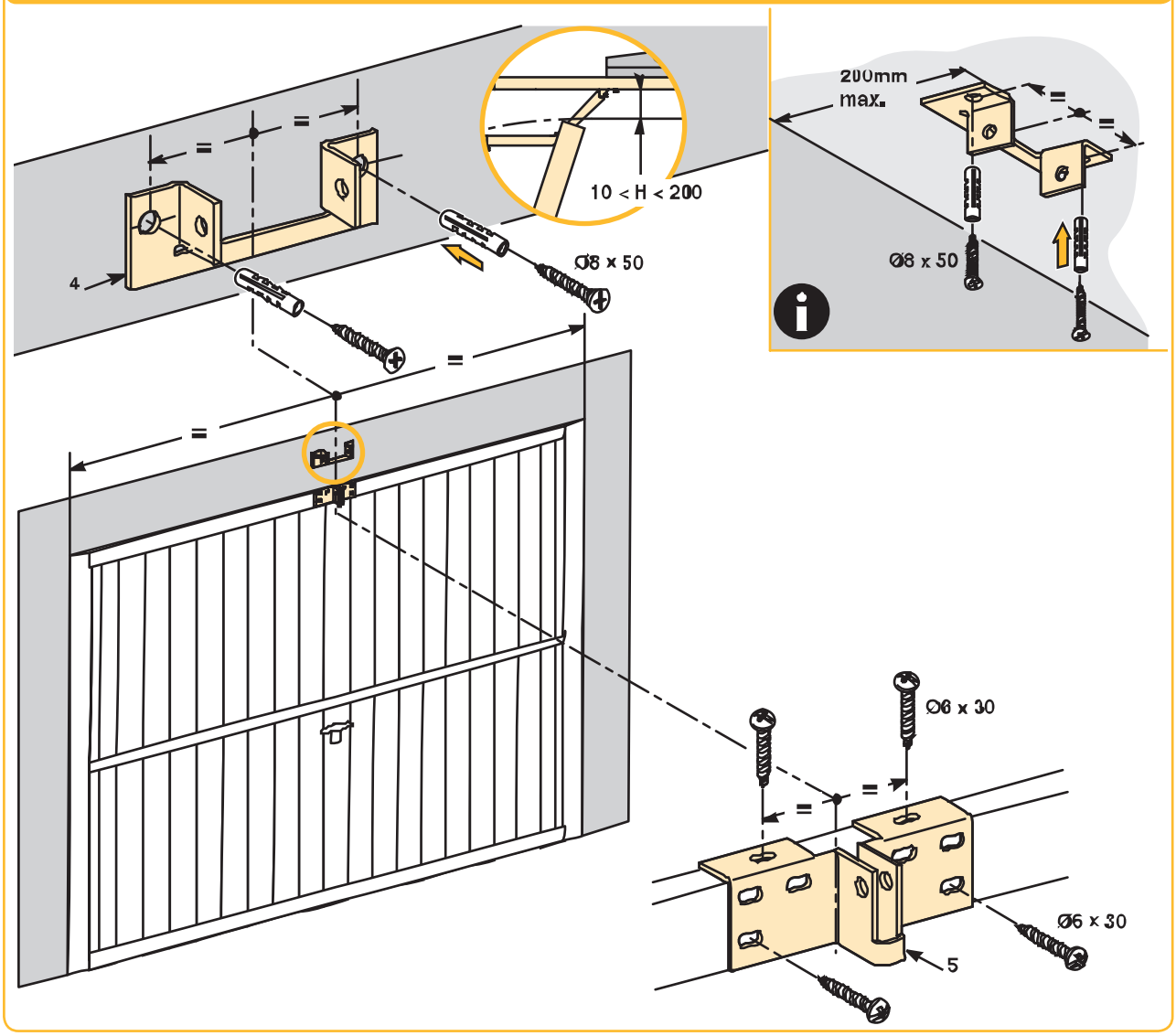
10 < H < 200
Ø8 x 50
4
200mm
max.
Ø8 x 50
Ø6 x 30
5
Ø6 x 30

6

[1]

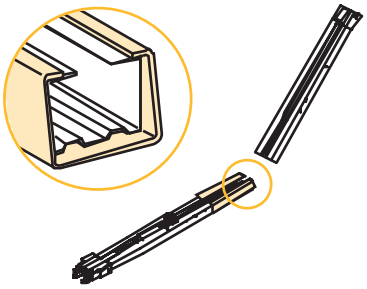

[2]

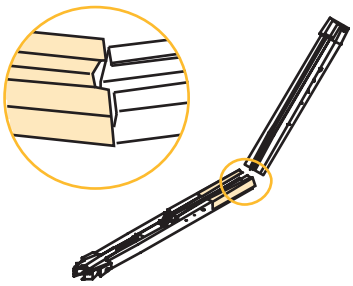

[3]

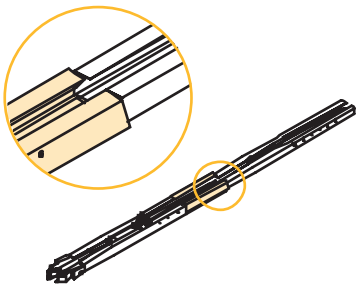

[4]

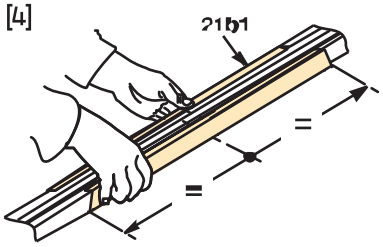

[5]

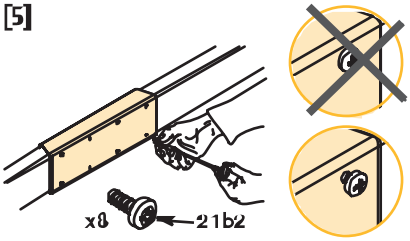

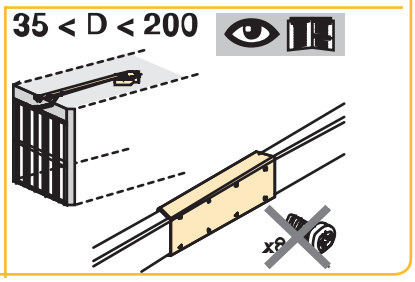

7

[1]

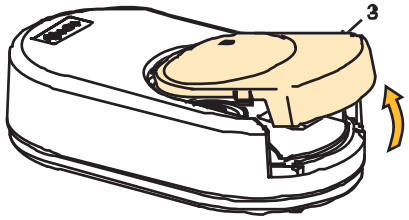

[2]

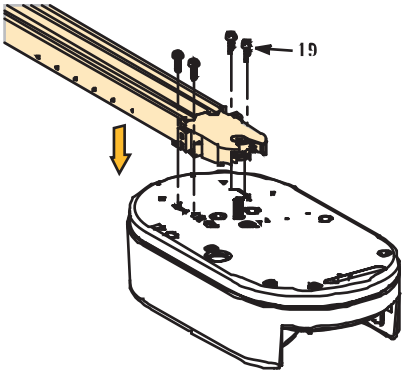

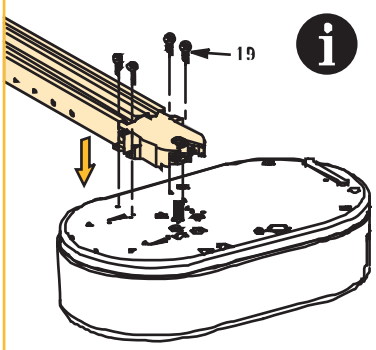

8

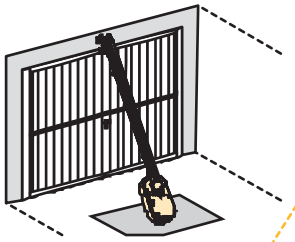

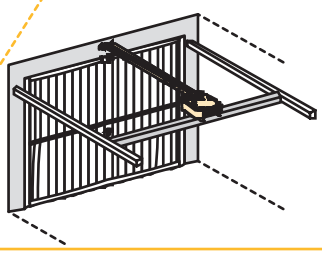

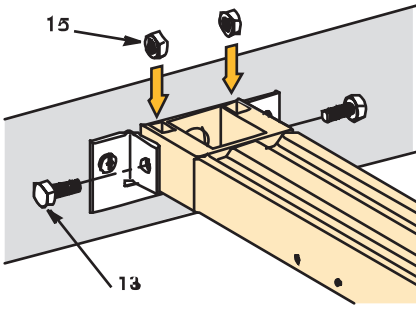

9

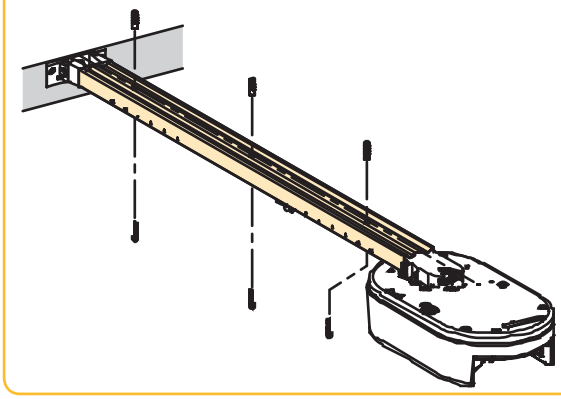

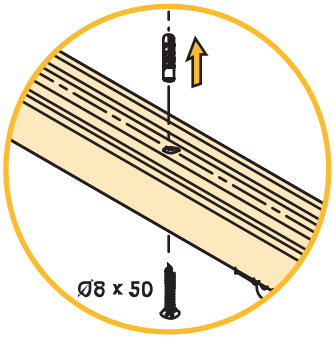

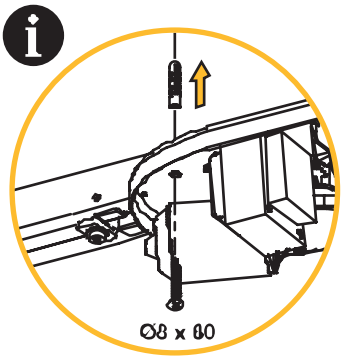

a

[1]

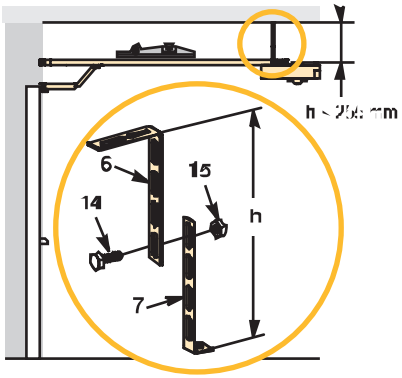

[2]

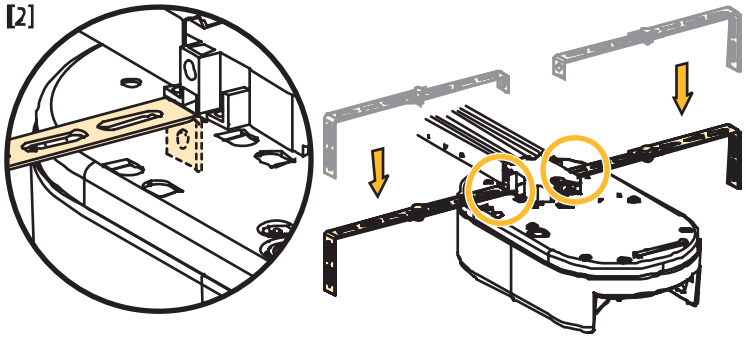

[3]

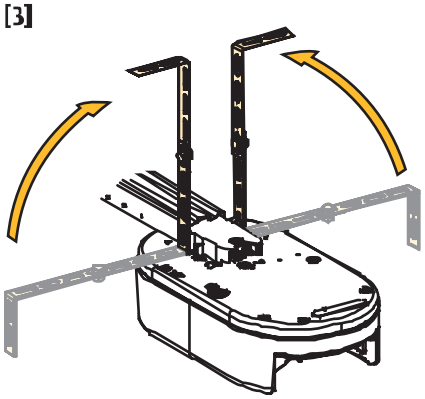

[4]

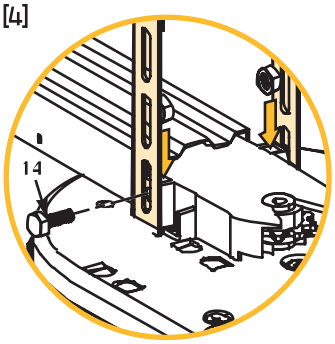

[5]

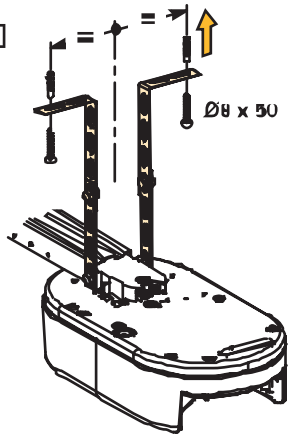

b

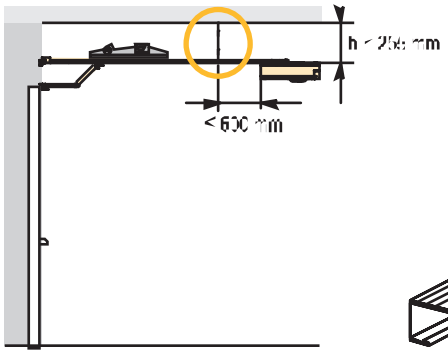

[1]

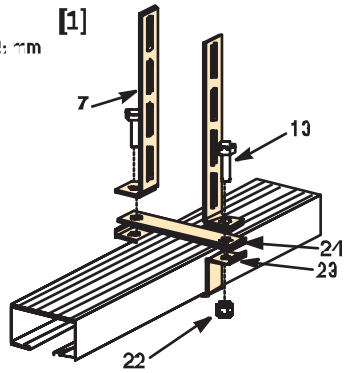

[2]

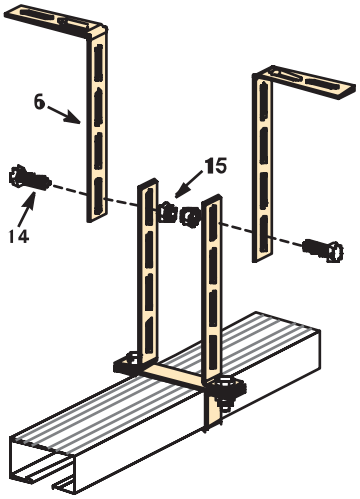

[3]

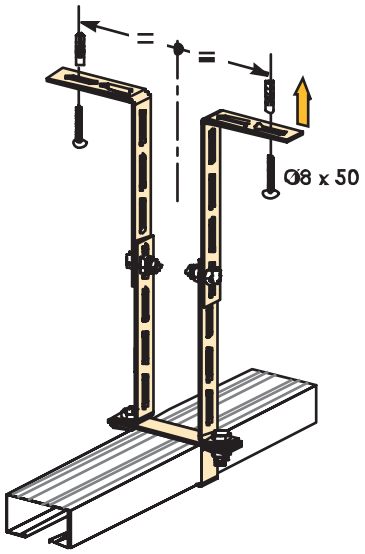

i

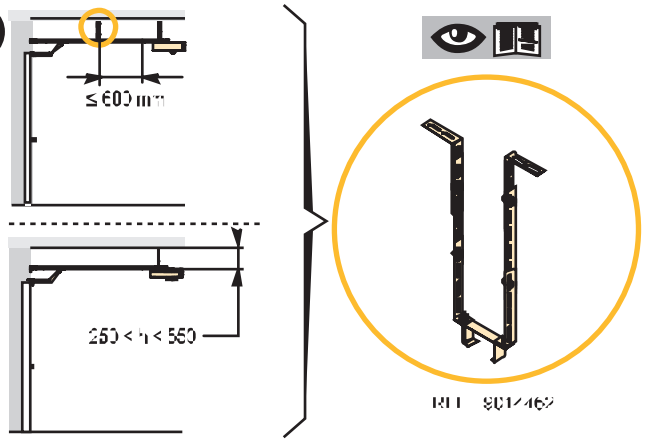

11

[1]

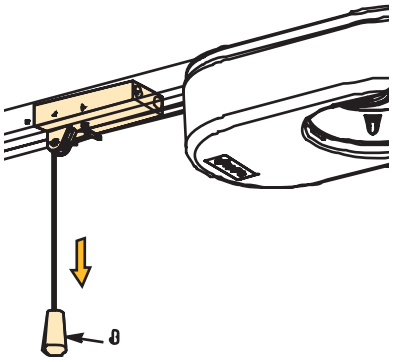

[2]

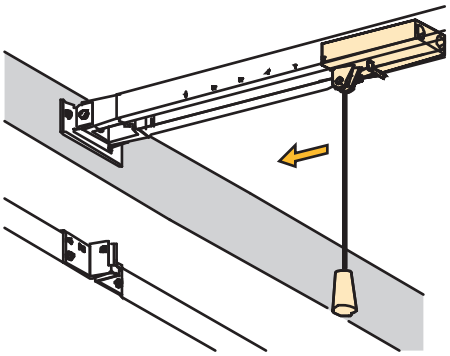

[3]

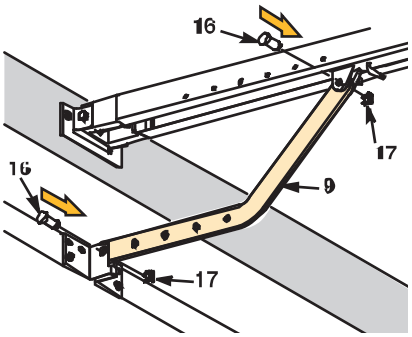

12

[1]

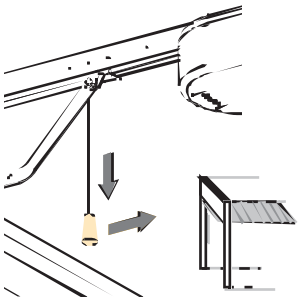

[2]

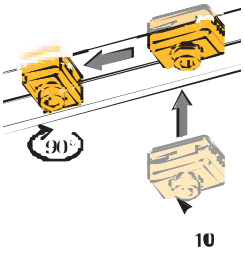

[3]

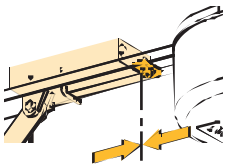

[4]

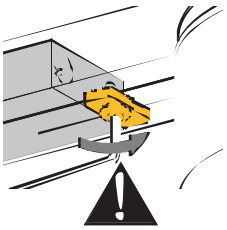

13

[1]

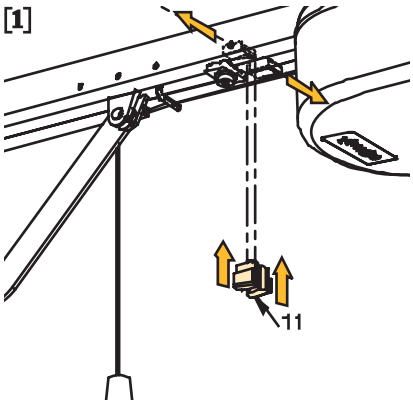

[2]

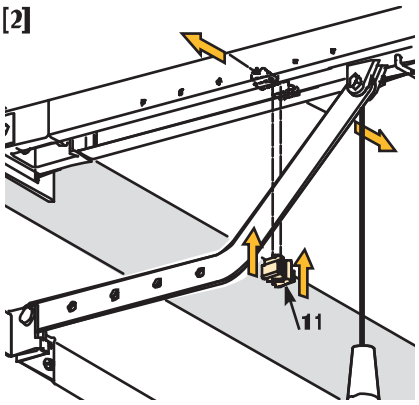

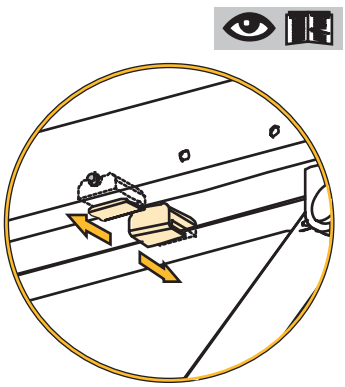

14

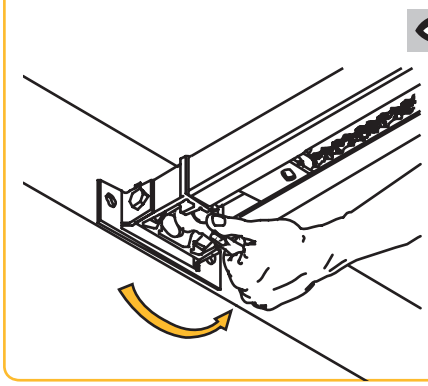

15

[1]

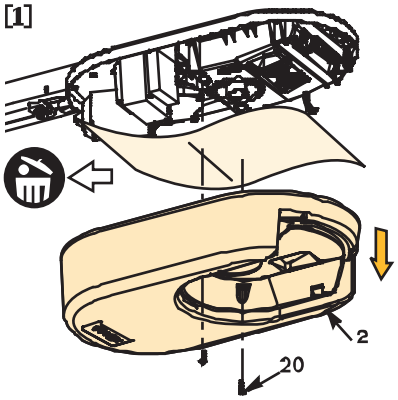

[2]

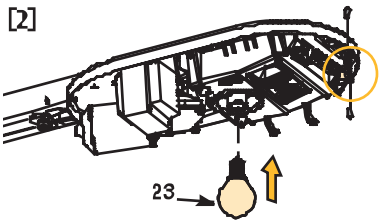

[3]

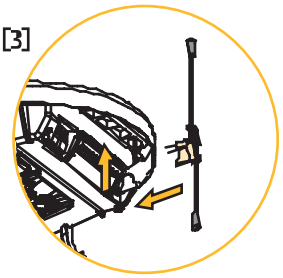

[4]

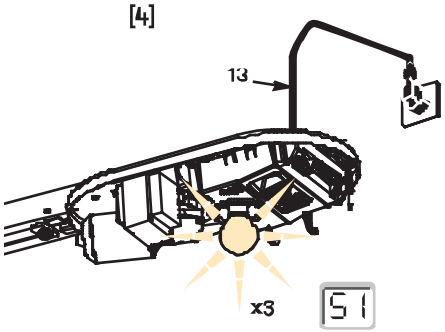

16

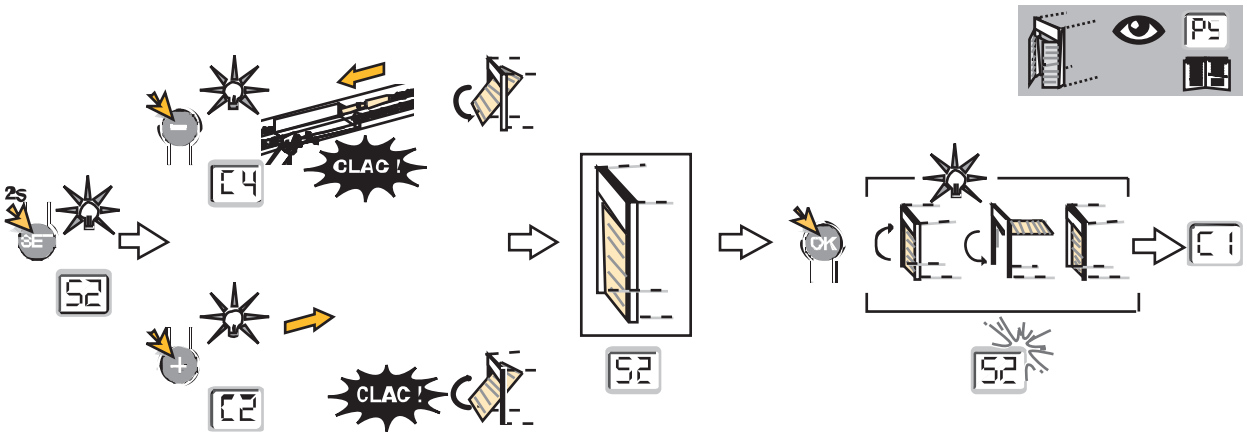
2s
CLAC !
CLAC !
OK

17

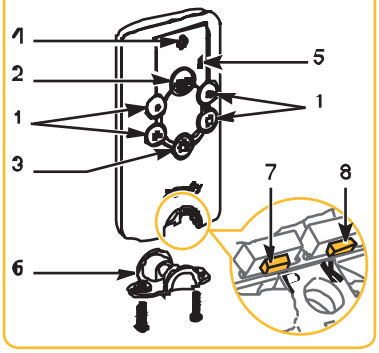
1
2
1
3
6
5
1
7
8

18

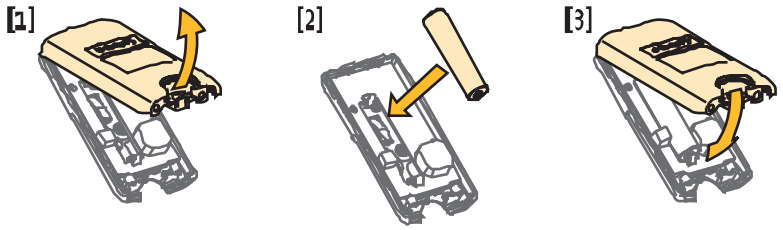
[1]
[2]
[3]

19

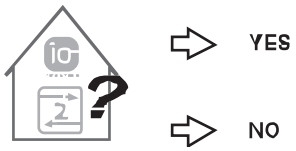
YES
NO

20

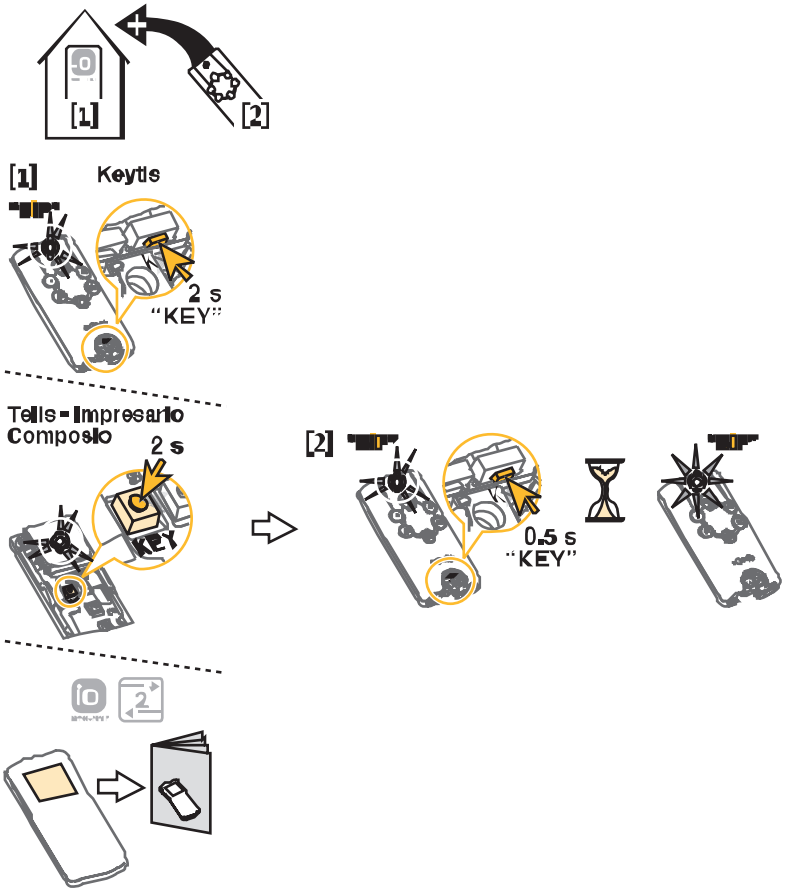
[1]
[2]
[1]
Keytis
2 s
"KEY"
Telis - Impresario
Composio
2 s
KEY
[2]
0.5 s
"KEY"

21

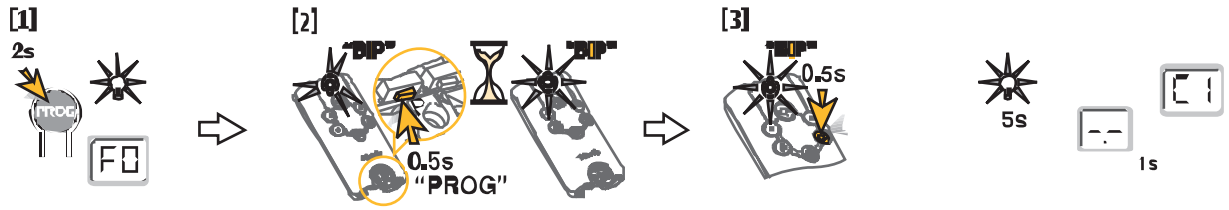

22

23

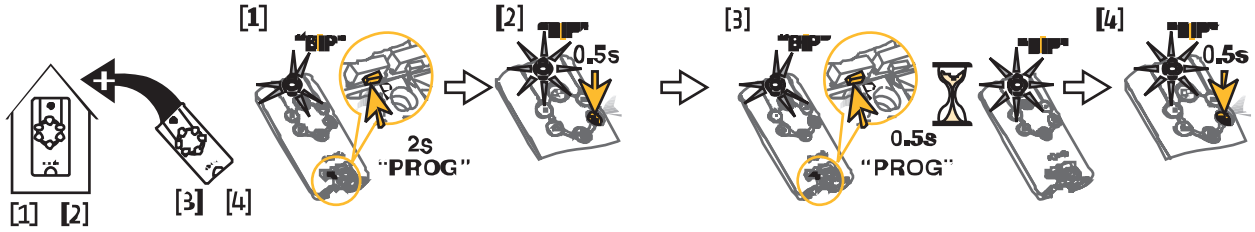

24

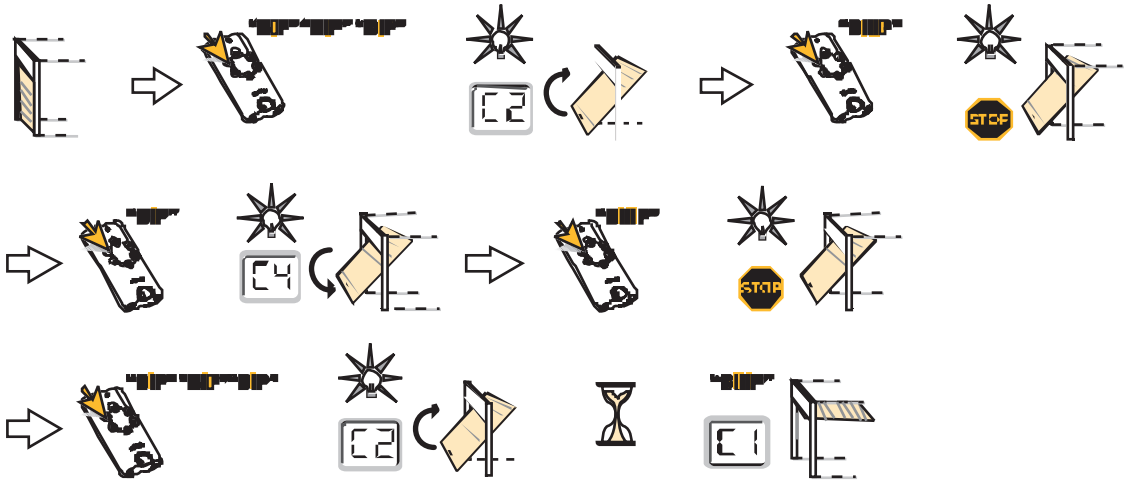

25

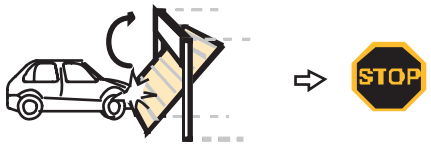

26

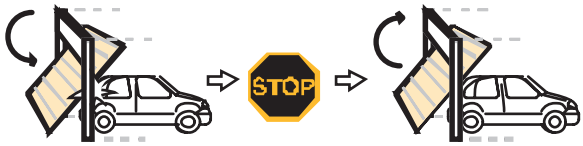

27

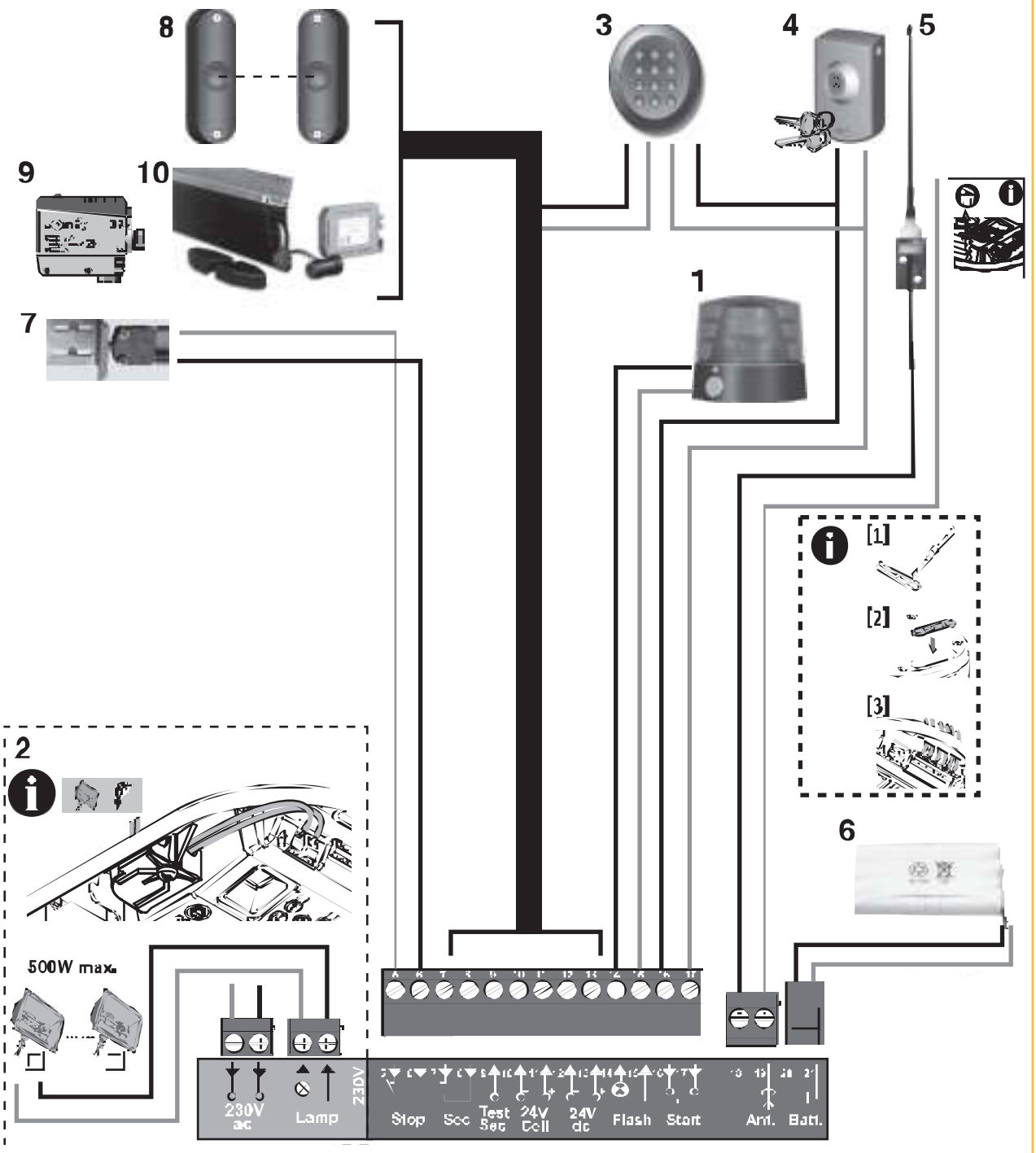

8
3
4
5
9
10
1
7
[1]
[2]
[3]
2
6
500W max.
230V ac
Lamp
230V
Stop
Sec
Test Sec
24V Cell
24V dc
Flash
Start
Ant.
Batt.

28

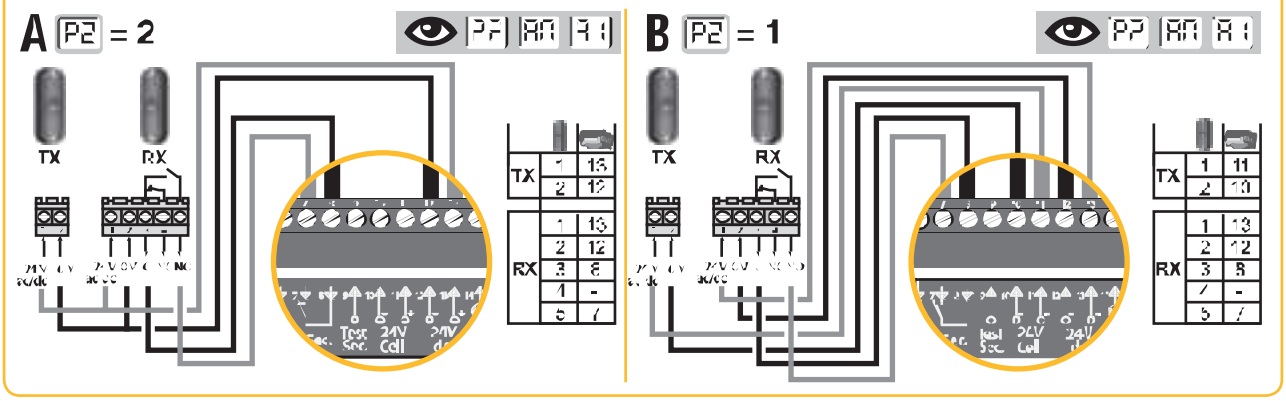

A P2 = 2
TX
RX
B P2 = 1
TX
RX

29

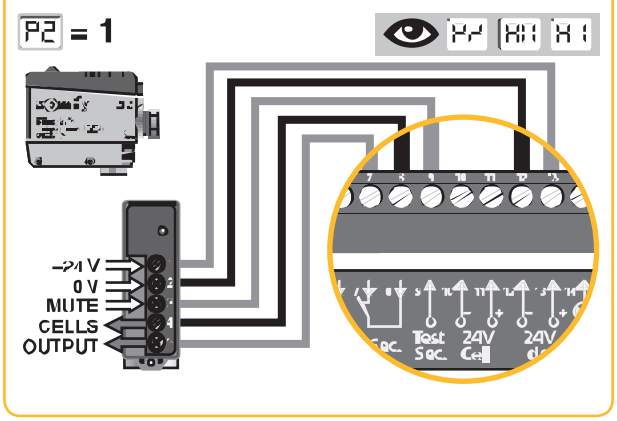

30

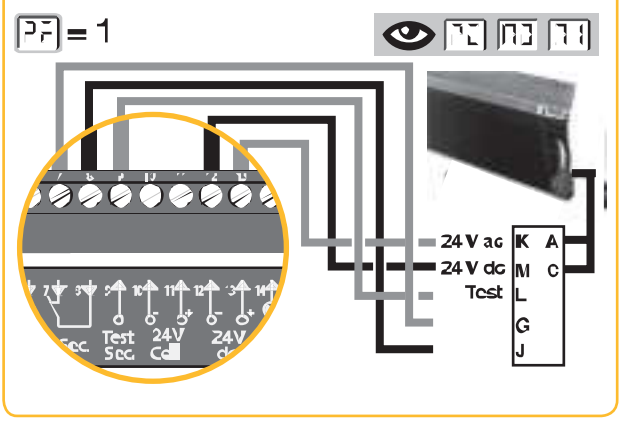

31

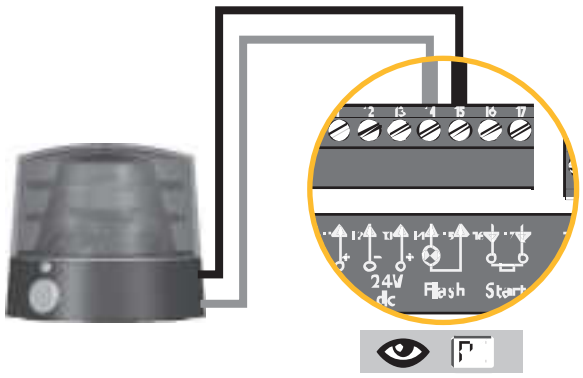

32

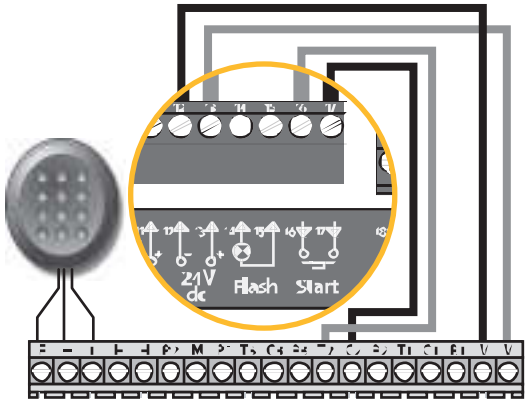

33

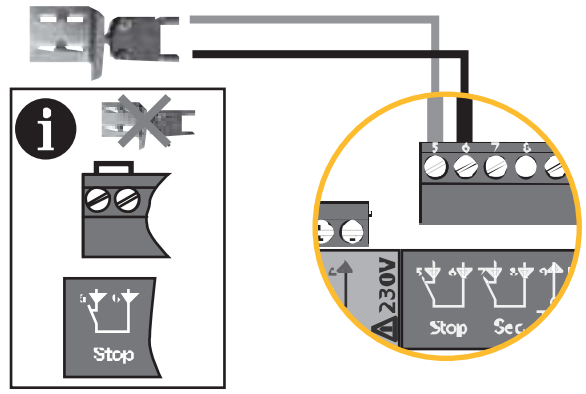

34

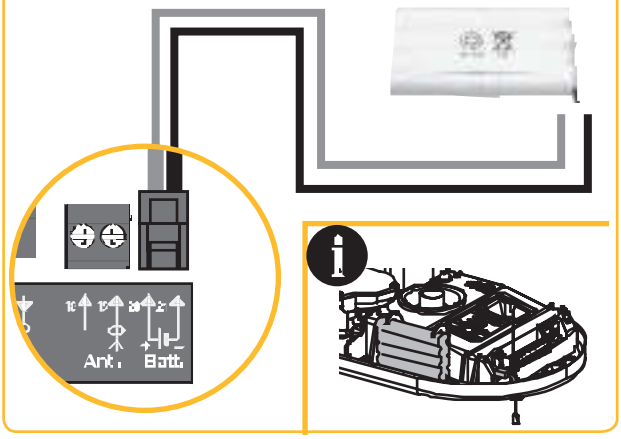

35

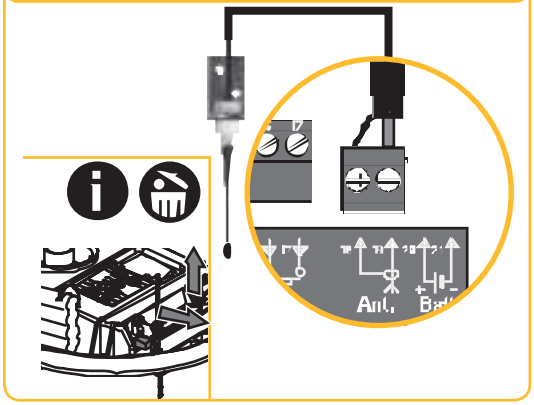

36

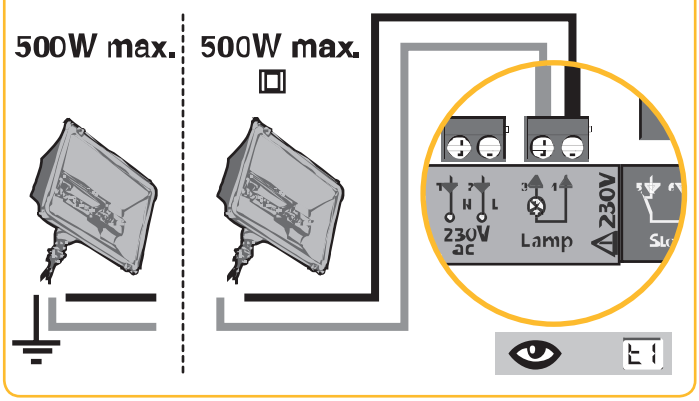

37

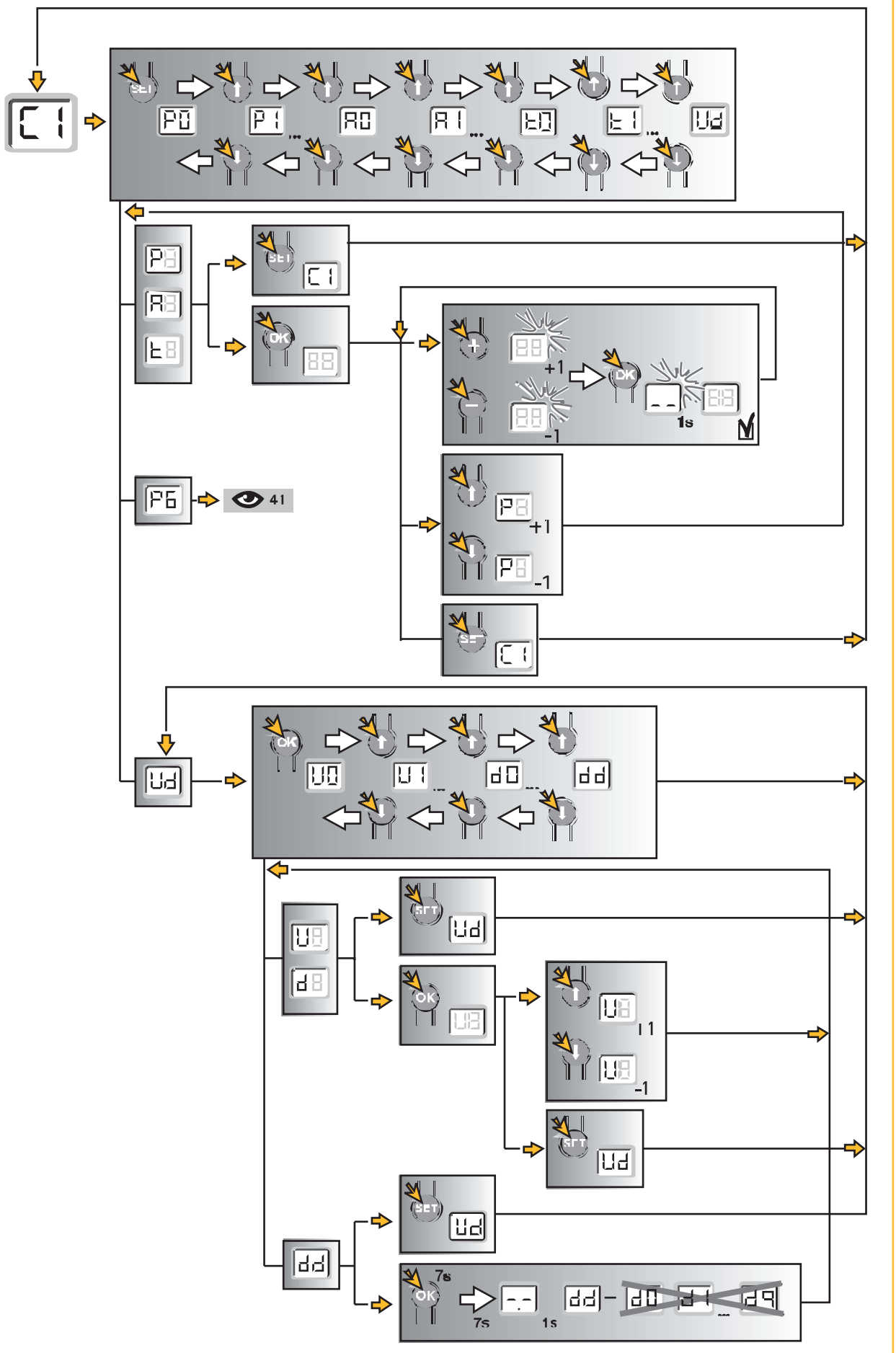

C1
SET
P0
P1
A0
A1
t0
t1
Ud
P8
A8
t8
OK
88
+1
-1
1s
P6
41
U0
U1
d0
dd
U8
d8
SET
7s
1s

38

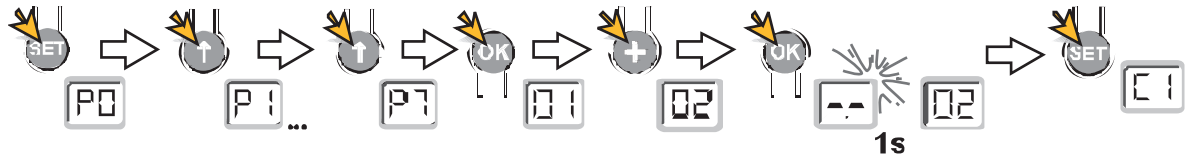

39

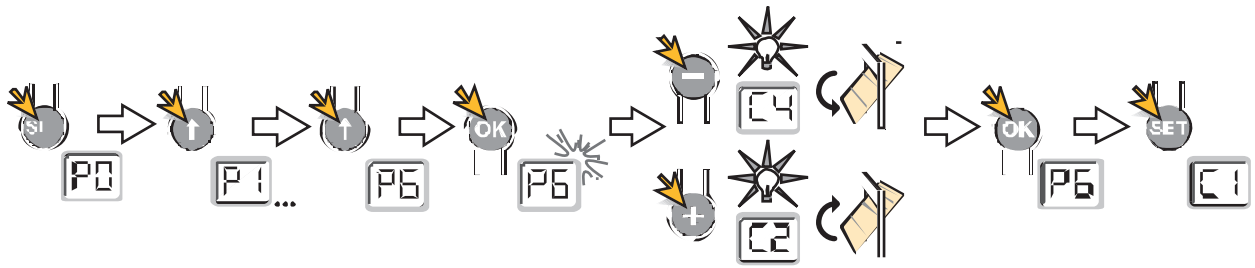

40

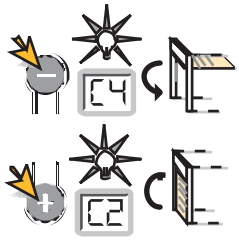

41

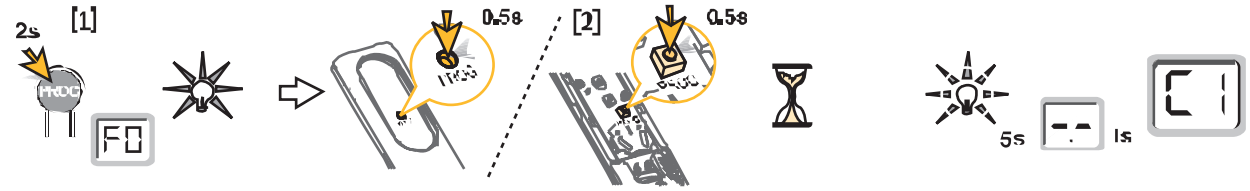

42

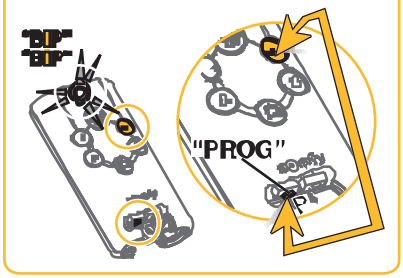

43

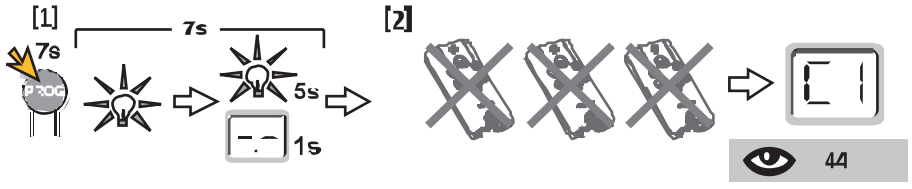

44

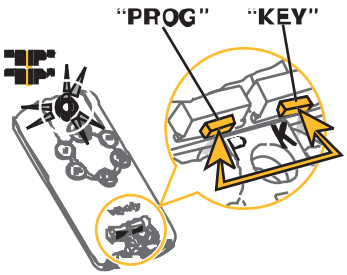

45

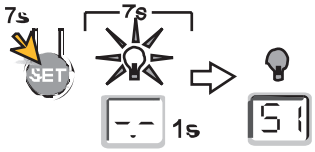

46

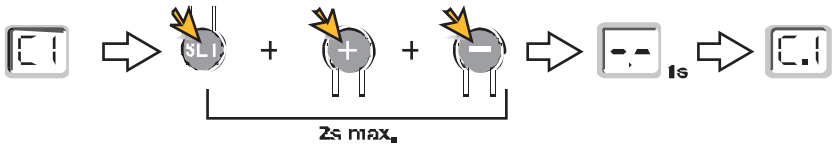

47

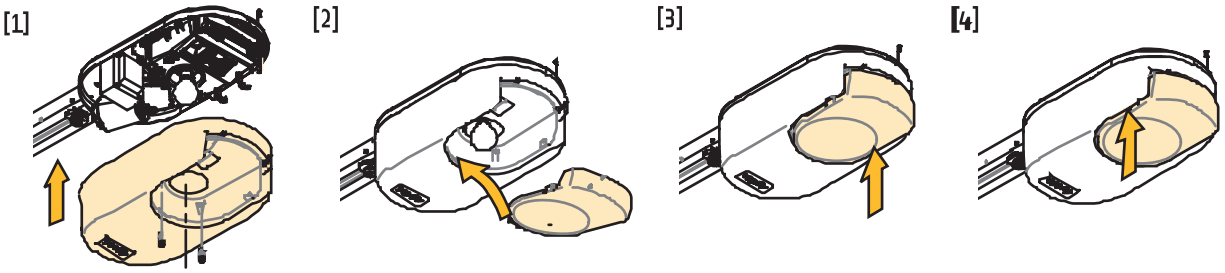

PATENTS AND DESIGN PATENTS PENDING FOR SOME COUNTRIES (e.g. US)
Somfy SAS, capital 20.000.000 Euros. RCS Annecy 303.970.230 - 03/2010

HOME MOTION BY somfy